C.I.P.	300 H&H Mag.	TAB.	III
		Date	84-06-14
	Country of Origin: GB	Revision	11-05-25

Alternative Names: 30 Super Belt. Riml. H&H, 300 H&H Belt. Riml. N.E.

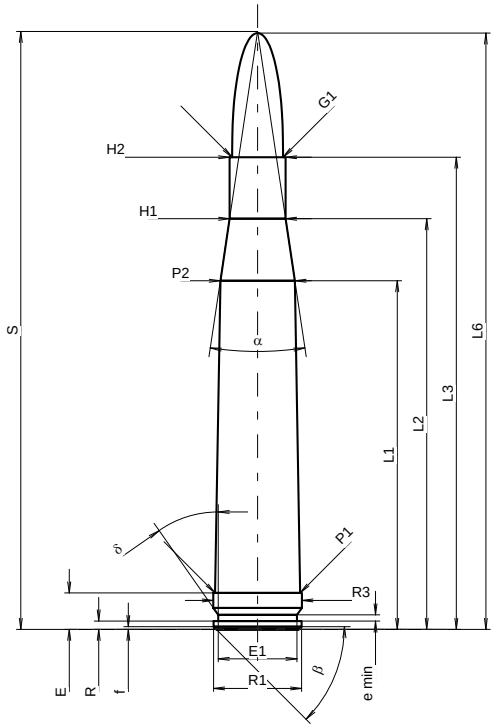

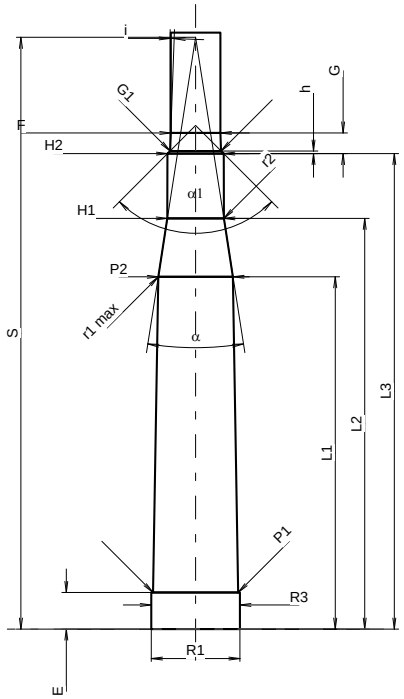

Scale 1:1.16

CARTRIDGE MAXI

Lengths

L1 *	=	53.46	
L2 *	=	62.96	
L3 1)	=	72.39	
L4	=		
L5	=		
L6	=	91.44	

Case Head

R	=	1.27	
R1	=	13.51	
R3	=	13.56	
E 1)	=	5.59	-0.20
E1	=	12.07	
e min	=	0.94	
δ	=	35°	
f	=	0.41	
β	=	45°	

Powder Chamber

P1	=	13.03
P2 *	=	11.43

Junction Cone

α	=	17°00'9"
S	=	91.69
r1 min	=	
r2	=	

Collar

H1 *	=	8.59
H2 1)	=	8.59

Projectile

G1 1)	=	7.82
G2	=	
F	=	
L3+G 1)	=	75.56

Pressures (Energies)
Method Transducer

Pmax	=	4300	bar
PK	=	4945	bar
PE	=	5375	bar
M	=	25.00	
EE	=	4725	Joule

Miscellaneous Dimensions

Fe 1)5)	=	0.10
delta L	=	

CHAMBER MINI

Lengths

L1 *	=	54.01
L2 *	=	62.96
L3 1)	=	72.90

Breech

R	=	
R1	=	13.59
R2	=	
R3	=	13.59
r	=	

Powder Chamber

E 1)	=	5.59
P1 1)	=	13.06
P2 *	=	11.45

Junction Cone

α	=	17°43'05"
S	=	90.74
r1 max	=	1.27
r2	=	2.54

Collar

H1 *	=	8.66
H2 1)	=	8.62

Commencement of Rifling

G1 1)*	=	7.82
G 1)*	=	3.17
α1	=	90°
h *	=	0.40
s	=	
i 1)	=	2°03'59"
w	=	

Barrel

F 1)*	=	7.62
Z 1)	=	7.82

Grooves

b	=	2.72	
N	=	6	
u	=	254.00	
Q	=	47.27	mm²

Dimensions in << mm >>
Dimensions and Tolerances for Proof Barrels
see Appendix CR 1.

Notes:
1) Check for safety reasons
5) Headspace on Belt
* Basic dimensions